3/4" SQ. DR. SUPER DUTY IMPACT WRENCH

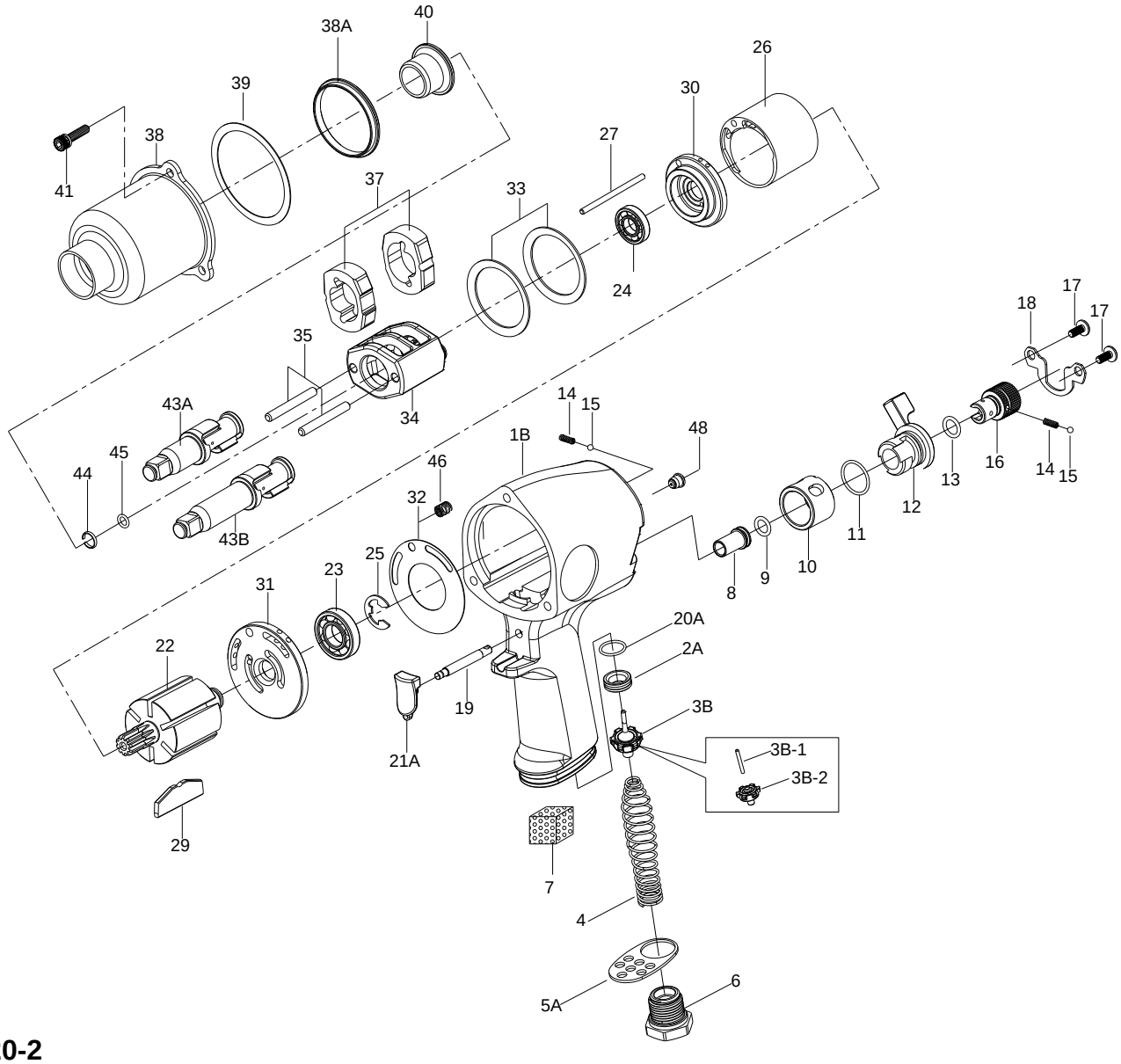

20/20-2

INDEX NO.	DESCRIPTION	REQ'D NO.	INDEX NO.	DESCRIPTION	REQ'D NO.
★ 1B	Housing Assembly { incl.8.9.10.46.48 }	1	24	Ball Bearing	1
2A	Throttle Valve Seat	1	25	Retainer	1
★ 3B	Throttle Valve Assembly (incl.3B-1.3B-2)	1	26	Cylinder	1
● 3B-1	Throttle Valve Pin	1	27	Cylinder Dowel	1
● 3B-2	Throttle Valve	1	29	Rotor Blade	6
4	Spring	1	30	Front End Plate	1
5A	Exhaust Deflector	1	31	Rear End Plate	1
6	Air Inlet	1	32	Gasket	1
7	Muffler Element	1	33	Motor Clamp Washer	2
● 8	Guide Tube	1	34	Hammer Frame	1
● 9	O-Ring	1	35	Hammer Pin	2
●10	Reverse Valve Bushing	1	37	Hammer	2
11	O-Ring	1	38	Hammer Case	1
12	Reverse Valve	1	38A	Separator	1
13	O-Ring	1	39	Gasket	1
14	Spring	2	40	Bushing	1
15	Steel Ball	2	41	Screw	3
16	Reverse Valve Knob	1	43A	Standard Anvil (for KI-20)	1
17	Screw	2	43B	2" Extended Anvil (for KI-20-2)	1
18	Retainer	1	44	Socket Retainer	1
●19	Trigger Pin	1	45	O-Ring	1
20A	O-Ring	1	● 46	Heli-Coil	3
★21A	Trigger Assembly (incl.19)	1	● 48	Grease Fitting	1
22	Rotor	1	TK	Tune-Up Kit { incl.4.7.9.11.13.14 (2).15 (2).20A.23.24.25.	
23	Ball Bearing	1		29 (6).32.39.44.45 }	

★ Must be Purchased in Assembly Set

● Recommended not to be purchased alone due to assembly difficulty

20140319R1