1/2" SQ. OIL-PULSE TOOLS

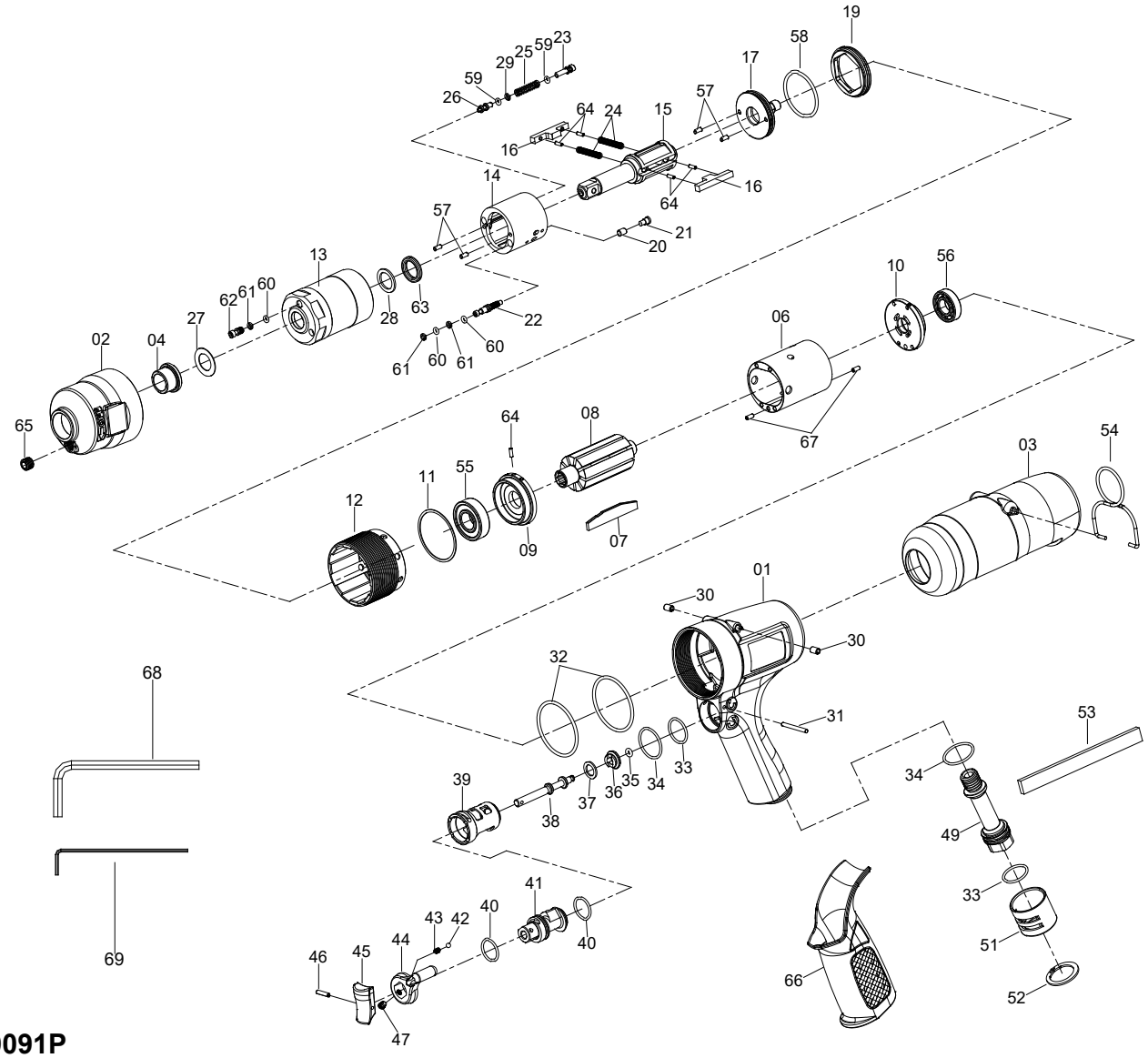

9091P

INDEX NO.	DESCRIPTION	REQ'D NO.	INDEX NO.	DESCRIPTION	REQ'D NO.
★ 01	Motor Casing Assembly { incl.30 (2) }	1	36	Throttle Valve	1
★ 02	Clutch Housing Assembly (incl.04.65)	1	37	Valve Plate	1
03	Protective Cover	1	38	Throttle Valve Pin	1
● 04	Case Bushing	1	39	Reverse Valve Bushing	1
★ 06	Cylinder Assembly { incl.67 (2) }	1	40	O-Ring	2
07	Blade	9	41	Revere Valve	1
08	Rotor	1	42	Ball	1
★ 09	Front End Plate Assembly { incl.55.64 (1) }	1	43	Revere Lever Spring	1
★ 10	Rear End Plate Assembly (incl.56)	1	44	Reverse Lever	1
11	Motor Spacer	1	45	Throttle Lever	1
12	Joint	1	46	Spring Pin	1
13	Liner Casing	1	47	Screw	1
14	Liner	1	49	Inlet Bushing	1
15	Spindle	1	51	Muffler Cover	1
16	Driving Blade	2	52	Inverted Retaining Ring	1
17	Top Cap	1	53	Filter	1
19	Top Nut	1	54	Suspension Ring	1
20	Valve	1	● 55	Ball Bearing	1
21	Spacer	1	● 56	Ball Bearing	1
22	Adjustment Screw	1	57	Pin	4
23	Piston Cap	1	58	O-Ring	1
24	Blade Spring	2	59	O-Ring	2
25	Piston Spring	1	60	O-Ring	3
26	Oil Piston	1	61	Supporting Ring	3
27	Thrust Plate	1	62	Oil Screw	1
28	Supporting Ring	1	63	B-Ring	1
29	Supporting Ring	1	● 64	Spring Pin	5
● 30	Spring Pin	2	● 65	Screw	1
31	Pin	1	66	Grip Cover	1
32	O-Ring	2	● 67	Spring Pin	2
33	O-Ring	2	68	4mm Hexagon Wrench	1
34	O-Ring	2	69	2mm Hexagon Wrench	1
35	O-Ring	1			

★ Must be Purchased in Assembly Set

● Recommended not to be purchased alone due to assembly difficulty

20181206R1