HEAVY DUTY HIGH SPEED MICRO AIR DIE GRINDER

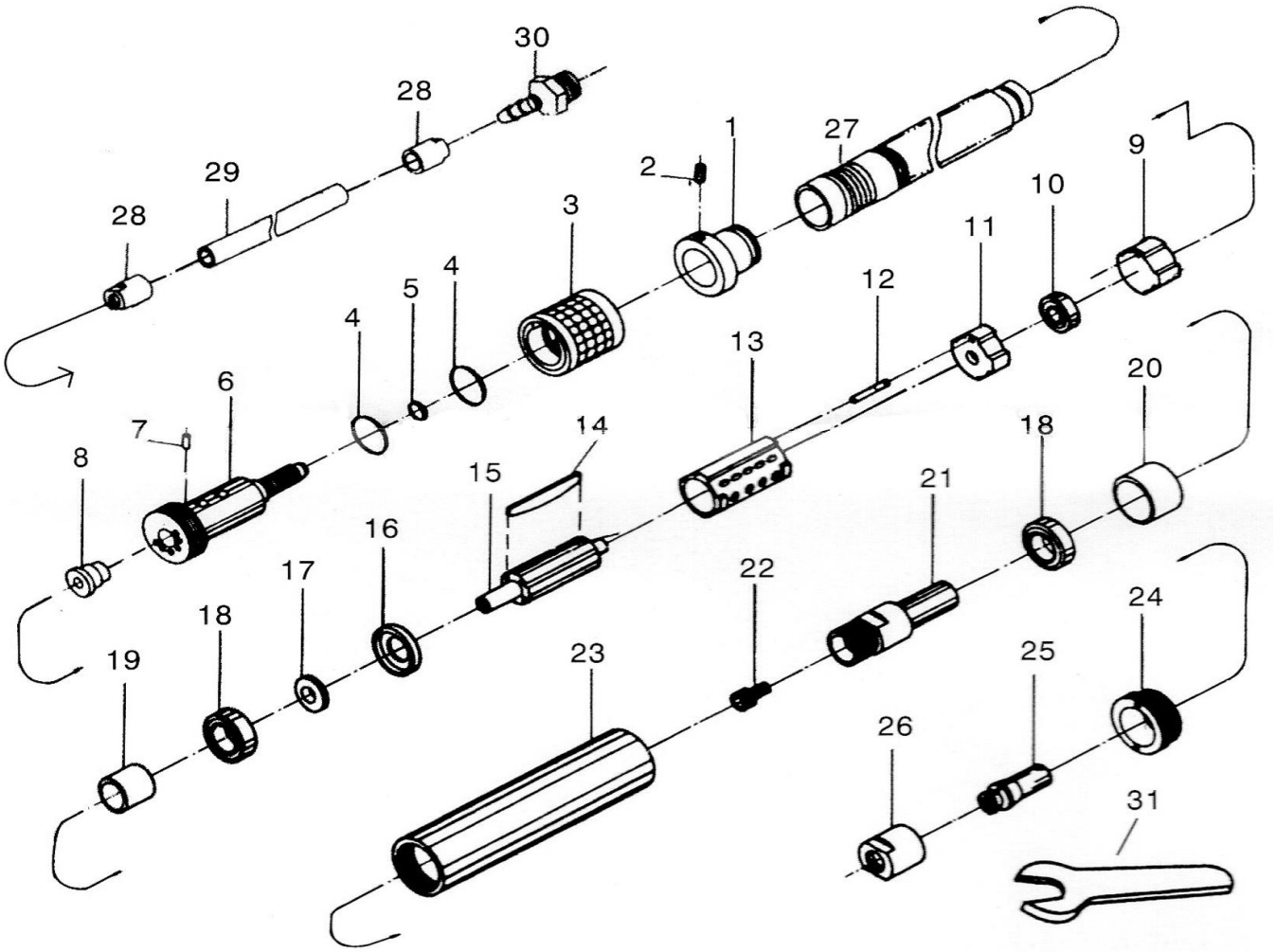

6252

INDEX NO.	DESCRIPTION	REQ'D NO.	INDEX NO.	DESCRIPTION	REQ'D NO.
01	Rear End Holder	1	17	Spacer	1
02	Screw	1	18	Ball Bearing	2
03	Sliding Knob	1	19	Interior Bearing Retainer Bushing	1
04	O-ring	2	20	Outer Bearing Retainer Bushing	1
05	O-ring	1	21	Collet Foundation	1
06	Hose Plug	1	22	Screw	1
07	Pin	1	23	Sleeve	1
08	Plug	1	24	Front Cover	1
09	Intake Plate	1	25	Collet	1
10	Ball Bearing	1	26	Clamping Nut	1
11	Bearing Plate	1	27	Muffler Tube	1
12	Pin	1	28	Hose Ring	2
13	Cylinder	1	29	Air Hose	1
14	Rotor Blade	4	30	Inlet Connector	1
15	Rotor	1	31	Spanner (11mm)	2
16	Lateral Disc	1			

0000.00.00

2004.04.21 2019.06.21